AS/NZS 1720.4:2019

Australian/New Zealand Standard™

Timber structures

Part 4: Fire resistance of timber elements

STANDARDS Australia

STANDARDS® NEW ZEALAND
PAEREWA AOTEAROA

AS/NZS 1720.4:2019

This Joint Australian/New Zealand Standard™ was prepared by Joint Technical Committee TM-010, Timber Structures and Framing. It was approved on behalf of the Council of Standards Australia on 9 December 2019 and by the New Zealand Standards Approval Board on 4 December 2019.

This Standard was published on 20 December 2019.

The following are represented on Committee TM-010:

Australian Building Codes Board
Australian Forest Products Association
Australian Institute of Building Surveyors
Building Research Association of New Zealand
Engineered Wood Products Association of Australasia
Engineers Australia
Forest and Wood Products Australia
Forest Industries Federation, WA
Frame & Truss Manufacturers Association of Australia
Glued Laminated Timber Association of Australia
Housing Industry Association
Housing SA
Institution of Fire Engineers
James Cook University, Qld
Master Builders Australia
Ministry of Business, Innovation and Employment, New Zealand
New Zealand Timber Industry Federation
Timber Development Association, NSW
Timber Queensland
University of Technology Sydney
Wood Processors & Manufacturers Association of New Zealand

This Standard was issued in draft form for comment as DR AS/NZS 1720.4:2018.

Keeping Standards up-to-date

Ensure you have the latest versions of our publications and keep up-to-date about Amendments, Rulings, Withdrawals, and new projects by visiting:

www.standards.org.au

www.standards.govt.nz

ISBN 978 1 76072 689 8

Australian/New Zealand Standard™

Timber structures

Part 4: Fire resistance of timber elements

Originated as AS 1720.4—1990.
Previous edition 2006.
Jointly revised and redesignated as AS/NZS 1720.4:2019.

COPYRIGHT

© Standards Australia Limited/the Crown in right of New Zealand, administered by the New Zealand Standards Executive 2019

All rights are reserved. No part of this work may be reproduced or copied in any form or by any means, electronic or mechanical, including photocopying, without the written permission of the publisher, unless otherwise permitted under the Copyright Act 1968 (Cth) or the Copyright Act 1994 (New Zealand).

Preface

This Standard was prepared by the Joint Standards Australia/Standards New Zealand Committee TM-010, Timber Structures and Framing, to supersede AS 1720.4—2006, *Timber structures, Part 4: Fire resistance for structural adequacy of timber members*.

The objective of this Standard is to provide a method for determining the fire resistance for structural adequacy and insulation of sawn timber, timber in pole form, plywood, laminated veneer lumber (LVL), and glued-laminated structural timber elements as an alternative to the test method specified in AS 1530.4.

This Standard forms part of the AS 1720 series, as follows:

AS 1720.1, *Timber structures, Part 1: Design methods*

AS 1720.2, *Timber structures, Part 2: Timber properties*

AS 1720.3, *Timber structures, Part 3: Design criteria for timber-framed residential buildings*

AS 1720.4, *Timber structures, Part 4: Fire resistance for structural adequacy of timber elements* (this Standard)

AS 1720.5, *Timber structures, Part 5: Nailplated timber roof trusses*

The terms "normative" and "informative" are used in Standards to define the application of the appendices to which they apply. A "normative" appendix is an integral part of a Standard, whereas an "informative" appendix is only for information and guidance.

© Standards Australia Limited/Standards New Zealand 2019

Contents

Preface ii

Section 1 Scope and general 1
1.1 Scope 1
1.2 Normative references 1
1.3 Terms and definitions 2
1.4 Materials 3
1.4.1 Timber materials 3
1.4.2 Structural adhesive 3
1.4.3 Non-structural adhesives 4
1.4.4 Non-fire-retardant treated timber 4

Section 2 Design method 5
2.1 General 5
2.2 Structural adequacy 5
2.3 Integrity 5
2.4 Insulation 5
2.5 Calculation of notional charring rate 6
2.5.1 Notional charring rate 6
2.5.2 Calculation of notional charring rate 6
2.5.3 Notional charring rate determined by test 6
2.6 Calculation of effective depth of charring 7
2.6.1 Charring of fire-exposed surfaces 7
2.6.2 Charring behind fire-resistant protective insulation 7
2.7 Determining the effective residual section 8
2.8 Barrier junctions 8

Section 3 Assessment of joints with metal connectors 10
3.1 Unprotected connectors 10
3.2 Protected metal connectors 10
3.2.1 General 10
3.2.2 Embedding 10
3.2.3 Fire-resistant protective insulation covering 10
3.2.4 Fire resistance testing 11

Appendix A (normative) **Determination of notional charring rate by test** 12

Appendix B (informative) **Advanced calculation methods** 13

Bibliography 14

NOTES

Australian/New Zealand Standard

Timber structures

Part 4: Fire resistance of timber elements

Section 1 Scope and general

1.1 Scope

This Standard provides a method for determining the fire resistance for structural adequacy and insulation of solid sawn timber, timber in pole form, plywood, laminated veneer lumber (LVL), and glued-laminated structural timber elements as an alternative to a standard fire test specified in AS 1530.4 for Australia and New Zealand; and the NZS/BS 476 series and EN 1365 series for New Zealand only.

This Standard also provides methods for protecting metal connectors from the effects of fire.

NOTE 1 This Standard is not relevant to the determination of the early fire hazard properties of materials for which a method of assessment is given in AS/NZS 1530.3.

NOTE 2 The advanced calculation method in Appendix B provides guidance for an additional method of determining fire resistance.

1.2 Normative references

The following documents are referred to in the text in such a way that some or all of their content constitutes requirements of this document.

NOTE Documents for informative purposes are listed in the Bibliography.

AS 1530.4, *Methods for fire tests on building materials, components and structures, Part 4: Fire-resistance test for elements of construction*

AS 1720.1, *Timber structures, Part 1: Design methods*

AS 2082, *Timber — Hardwood — Visually stress-graded for structural purposes*

AS 2858, *Timber — Softwood — Visually stress-graded for structural purposes*

AS 3519, *Timber — Machine proof grading*

AS 3818.3, *Timber — Heavy structural products — Visually graded, Part 3: Piles*

AS 3818.11, *Timber — Heavy structural products — Visually graded, Part 11: Utility poles*

AS/NZS 1170.0, *Structural design actions, Part 0: General principles*

AS/NZS 1328.1, *Glued laminated structural timber, Part 1: Performance requirements and minimum production requirements*

AS/NZS 1748.1, *Timber — Solid — Stress-graded for structural purposes, Part 1: General requirements*

AS/NZS 2269.0, *Plywood — Structural, Part 0: Specifications*

AS/NZS 4063, *Characterization of structural timber* (series)

AS/NZS 4357.0, *Structural laminated veneer lumber, Part 0: Specifications*

NZS 3603, *Timber Structures*

NZS 3631, *New Zealand timber grading rules*

© Standards Australia Limited/Standards New Zealand 2019

NZS/BS 476, *Fire tests on building materials and structures* (series)

EN 1365, *Fire resistance tests for loadbearing elements* (series)

1.3 Terms and definitions

For the purposes of this Standard, the following terms and definitions apply.

1.3.1
design actions
combination of actions in calculating the fire resistance for structural adequacy of structural elements determined in accordance with AS/NZS 1170.0

1.3.2
design density seasoned timber
density of timber at 12 % moisture content

1.3.3
effective depth of charring
calculated depth to which the timber is considered as being charred

1.3.4
effective residual section
timber section remaining after removal of the calculated effective depth of charring from all fire-exposed surfaces

Note 1 to entry: The effective residual section is considered to retain the same mechanical properties it possessed before exposure to the standard fire.

1.3.5
fire resistance level (FRL) or fire resistance rating (FRR)
performance criteria for fire resistance, that is, the grading periods (in minutes) for the criteria specified in the National Construction Code (FRL) or the New Zealand Building Code (FRR), as —

(a) structural adequacy;

(b) integrity; and

(c) insulation,

and expressed in that order

1.3.6
fire-resistant protective insulation
thermal insulation materials, including board products and wood products that are permanently fixed to the fire-exposed surfaces of a timber element or metal connector to increase the fire resistance for structural adequacy

1.3.7
may
indicates the existence of an option

1.3.8
notional charring rate (for design purposes)
rate at which timber is assumed to be converted to char when exposed to fire

1.3.9
should
indicates a recommendation

© Standards Australia Limited/Standards New Zealand 2019

1.3.10
shall
indicates that a statement is mandatory

1.3.11
standard fire test
tests are defined per region, as follows:

(a) *For Australia* — Fire-resistance tests of elements of building construction in accordance with AS 1530.4.

(b) *For New Zealand* — Fire-resistance tests of elements of building construction in accordance with AS 1530.4, or fire tests on building materials and structures in accordance with NZS/BS 476 (series), or fire resistance tests for loadbearing elements in accordance with EN 1365 (series).

1.3.12
structural timber element
any timber component or element forming part of the loadbearing framework of a structure including, but not limited to, structures as classified in the National Construction Code for Australia or the New Zealand Building Code

1.4 Materials

1.4.1 Timber materials

Solid sawn timber, timber in pole form, plywood, laminated veneer lumber (LVL), and glued-laminated structural timber elements used in accordance with this Standard shall conform with the requirements of the relevant Standards, as follows:

(a) *Visually graded sawn timber* — AS 2082, AS 2858 or NZS 3631.

(b) *Solid stress graded structural timber* — AS/NZS 1748.1.

(c) *Proof-graded timber* — AS 3519.

(d) *Structural plywood* — AS/NZS 2269.0.

(e) *Structural laminated veneer lumber* — AS/NZS 4357.0.

(f) *Glued laminated timber* — AS/NZS 1328.1.

(g) *Round timber* — AS 3818.3 or AS 3818.11, as appropriate.

(h) *Other timber products or grades* — Timber products or grades not listed in this Standard shall have properties established by testing and evaluation methods consistent with those described in the AS/NZS 4063 series. In addition, for other timber-based products, modification factors for duration of load effect for strength and stiffness shall be determined based on testing.

1.4.2 Structural adhesive

Phenol, resorcinol, phenol-resorcinol or poly-phenolic structural adhesives permitted in the manufacturing standards for glue laminated timber, plywood or laminated veneer lumber (LVL), fabricated in accordance with the following Standards shall be used:

(a) AS/NZS 1328.1.

(b) AS/NZS 2269.0.

(c) AS/NZS 4357.0.

© Standards Australia Limited/Standards New Zealand 2019

NOTE 1 Thermo-setting adhesives including phenol, resorcinol, phenol-resorcinol or poly-phenolic adhesives are not affected by high temperatures (approximately 220 °C), therefore their effect on charring rates can be ignored.

For timber elements directly exposed to fire, other adhesives used for structural purposes shall produce joints of sufficient strength and durability that the integrity of the bond is maintained and verified by testing for the required fire resistance period.

This Standard also applies to structural timber elements fabricated from components, or combinations of components, of sawn timber, glue laminated timber, plywood or LVL with adhesive that conforms with this clause (1.4.2).

NOTE 2 Other structural adhesives are outside the scope of this Standard but may have fire performance verified by standard fire testing.

1.4.3 Non-structural adhesives

Structural timber elements constructed from non-structural adhesives such as PVA and elastomeric adhesives shall be regarded to be ineffective under fire conditions.

1.4.4 Non-fire-retardant treated timber

The design procedures given in this Standard shall apply only to timber that has not been treated with fire-retardant chemicals.

NOTE 1 The primary purpose of fire-retardant treatments, either pressure impregnation or fire-retardant coatings, is to alter the surface burning characteristics of a timber substrate by lowering the substrate's reaction to fire as measured by AS/NZS 3837 or the ISO 5660 (series). The use of such fire-retardant treatments is administered through the National Construction Code (NCC) or the New Zealand Building code (NZBC).

NOTE 2 The ability of fire-retardant treatments to improve the fire resistance for structural adequacy or insulation of a timber element can only be assessed through testing in accordance with a standard fire test. Generally, fire-retardant treatments do not materially improve the fire resistance for structural adequacy of timber.

© Standards Australia Limited/Standards New Zealand 2019

Section 2 Design method

2.1 General

This section sets out a method for determining the structural adequacy, integrity and insulation of timber elements for a nominated fire resistance period (FRL or FRR). It specifies the method used to calculate the residual cross-section for a timber element following notional charring of the surfaces that have been exposed to a standard fire test for the nominated period

The minimum width or thickness of any timber element before charring shall be 75 mm.

NOTE There are limitations to char methods when applied to fire-separating barriers where charring of the barrier may result in deflection and gaps forming. In this case, char analysis may not be sufficient in isolation and the integrity and insulation performance should be verified by testing or an advanced calculation method which incorporates these effects.

2.2 Structural adequacy

The combination of actions applied to the structural element during the nominated fire resistance period shall be determined in accordance with AS/NZS 1170.0.

The strength, stability and deformation of the residual portion of the element shall be determined using a standard fire test or calculated in accordance with AS 1720.1, assuming a load duration of 5 h. These calculations shall allow for any loss of structural restraint due to charring of the member under consideration, charring of restraining elements exposed to fire, or loss of strength of fire-affected connections.

NOTE There are no deflection limits for structural adequacy.

The procedure to determine the residual cross-section after the nominated fire resistance period for use in structural adequacy checks shall be as follows:

(a) Determine the notional charring rate for the timber species in accordance with Clause 2.5.

(b) Determine the effective depth of charring in accordance with Clause 2.6.

(c) Determine the extent of the residual section based on the effective depth of charring in accordance with Clause 2.7.

2.3 Integrity

The integrity of a building element shall be determined using a standard fire test.

NOTE There are no deflection limits when calculating the fire resistance of structural elements, however, the design of a structural separating element such as a load-bearing wall or a floor-ceiling assembly needs to consider whether large deflections or other deformations will lead to an integrity failure.

2.4 Insulation

The insulation of a building element shall be determined using a standard fire test or by calculation of the residual cross-section after the nominated fire resistance period.

Where the calculation of the effective residual cross-section is used, and after the nominated fire resistance period, the minimum residual width or thickness of an element providing separation shall be 23 mm when calculated in accordance with Clause 2.7.

NOTE 1 This minimum is based on empirical data for the heat affected region below the char layer and where gaps have no effect.

NOTE 2 The above calculation assumes the calculation achieves the minimum thickness of 30 mm when the 7 mm of uncharred timber is accounted for.

© Standards Australia Limited/Standards New Zealand 2019

2.5 Calculation of notional charring rate

The notional charring rate for timber exposed to a fire shall be determined from Clause 2.5.1, Clause 2.5.2 or Clause 2.5.3.

2.5.1 Notional charring rate

The notional charring rate for common timber species shall be determined in accordance with Table 2.5.1.

Table 2.5.1 — Notional charring rates for common timber species

Timber species	Notional charring rate mm/minute
Blackbutt	0.50
Cypress	0.56
Douglas fir (North America and New Zealand)	0.65
European spruce	0.65
Gum, spotted	0.46
Ironbark, grey	0.46
Ironbark, red	0.47
Jarrah	0.52
Merbau (Kwila)	0.51
Radiata pine (Australia and New Zealand)	0.65
Victorian ash and Tasmanian oak	0.59
NOTE These values are in accordance with Eurocode 5 and NZS 3603.	

2.5.2 Calculation of notional charring rate

The notional charring rate shall be calculated as follows in Equation 2.5.2:

$$c = 0.4 + \left(\frac{280}{\delta}\right)^2 \qquad 2.5.2$$

where

c = notional charring rate, in millimetres per minute

δ = timber density at a moisture content of 12 %, in kilograms per cubic metre. For engineered wood products, this shall be based on the primary timber species not including any adhesive

NOTE 1 For Australia, information on density values for timber species can be obtained from AS 1720.1 or AS 1720.2.

NOTE 2 For New Zealand, the design density of New Zealand grown Radiata pine is taken to be 550 kg/m^3 to achieve a charring rate of 0.65. This includes laminated veneer lumber (LVL). The design density for other timber species is given in AS 1720.1 or AS 1720.2

NOTE 3 In calculating structural adequacy of an element, the notional charring rate in this standard is inteneded to provide similar structural adequacy to an element tested in accordance with the standard fire test.

2.5.3 Notional charring rate determined by test

The notional charring rate of timber shall be determined by testing in accordance with Appendix A.

© Standards Australia Limited/Standards New Zealand 2019

2.6 Calculation of effective depth of charring

The effective depth of charring (d_c) after a period of time (t) shall be calculated in accordance with Clause 2.6.1 for surfaces exposed to fire and in accordance with Clause 2.6.2 for surfaces behind fire-resistant protective insulation.

2.6.1 Charring of fire-exposed surfaces

The effective depth of charring for surfaces exposed to fire shall be calculated as follows in Equation 2.6.1:

$$d_c = c\,t + 7.0 \text{ mm} \qquad 2.6.1$$

where

d_c = calculated effective depth of charring, in millimetres

c = notional charring rate, in millimetres per minute

t = period of time, in minutes

NOTE The 7.0 mm in Equation 2.6.1 accounts for a layer of uncharred timber at elevated temperatures, which is assumed to contribute no strength or stiffness to the residual section.

2.6.2 Charring behind fire-resistant protective insulation

The effective depth of charring for surfaces behind fire-resistant protective insulation shall be determined using a standard fire test or be calculated as follows in Equation 2.6.2:

$$d_c = c\,(t - t_{300}) + 7.0 \text{ mm} \qquad 2.6.2$$

where

t_{300} = the period of time that the surface of the timber beneath the fire-resistant protective insulation takes to reach 300 °C as determined by fire resistance testing in a standard fire test (with insulation in place), in minutes

Fire-resistant protective insulation shall be installed as detailed in the fire test report, see Clause A.5.

Equation 2.6.2 shall only be used for elements with original cross-section dimensions that are equal to or greater than those tested to determine t_{300}.

If the fire-resistant protective insulation fell off before time (t) during the fire resistance test used to determine t_{300}, the effective depth of charring shall be calculated using a notional charring rate of 2 c for the period of time between when the insulation fell off and when the effective depth of charring reached 25 mm.

NOTE Figure 2.6.2 shows a typical timber beam protected with two layers of fire-resistant protective insulation board.

© Standards Australia Limited/Standards New Zealand 2019

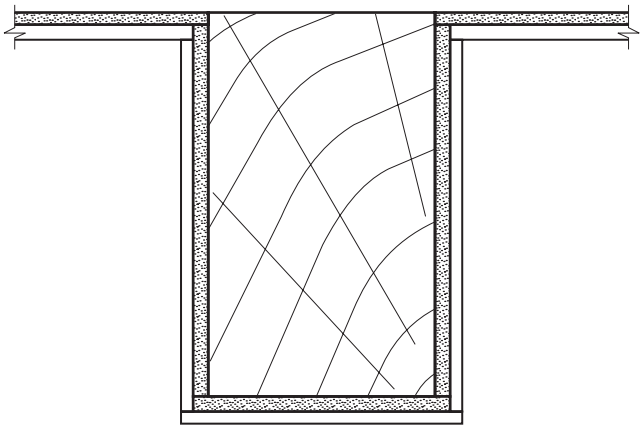

Figure 2.6.2 — Typical protected timber element

2.7 Determining the effective residual section

The effective residual section shall be determined by subtracting the calculated effective depth of charring d_c from all fire-exposed surfaces of the timber element, as shown in Figure 2.7.

When determining the effective residual section of rectangular elements, corner charring shall be ignored as shown in Figure 2.7.

Charring of solid timber floors shall be in accordance with Clause 9.5.4 of NZS 3603:1993.

For hollow timber box beams with interior voids that will not be exposed to fire, the effective residual section shall be determined in the same way as for a solid section.

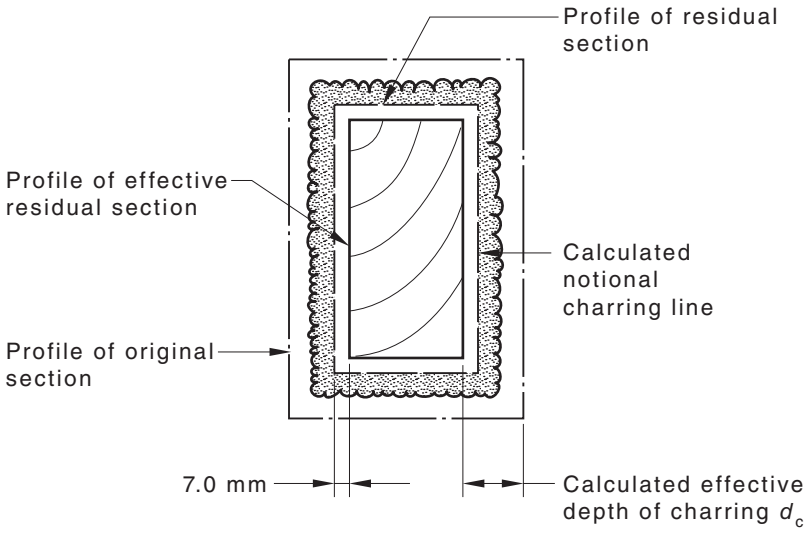

Figure 2.7 — Loss of section due to charring

2.8 Barrier junctions

If an unprotected timber element is incorporated in a fire-resisting barrier and the unprotected timber element is detailed to prevent gaps from forming at the junction of the barrier and the timber element, the effect of the barrier junction on the effective residual section when determining fire resistance for structural adequacy shall be taken into account.

NOTE The effect of the barrier junction on the effective residual section is shown in Figure 2.8.

© Standards Australia Limited/Standards New Zealand 2019

The effect of any anticipated deformations on insulation and integrity of the barrier shall be determined.

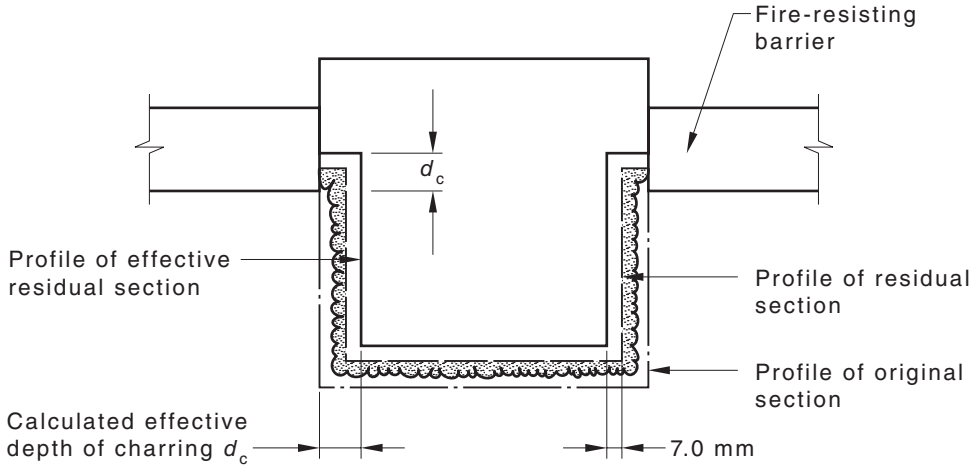

Figure 2.8 — Example of charring details at junction with fire-resisting barrier

© Standards Australia Limited/Standards New Zealand 2019

Section 3 Assessment of joints with metal connectors

3.1 Unprotected connectors

The fire resistance for structural adequacy of joints fabricated with unprotected metal connectors shall be established by test in accordance with a standard fire test. In the absence of test information, the fire resistance for structural adequacy of joints fabricated with unprotected metal connectors shall be regarded as negligible.

3.2 Protected metal connectors

3.2.1 General

The fire resistance for structural adequacy of metal connectors may be improved by the means of protection given in Clause 3.2.2, Clause 3.2.3, or Clause 3.2.4.

3.2.2 Embedding

Where protection is provided by means of embedding, the metal connectors shall be fully embedded within a timber element to a depth equal to the calculated effective depth of charring in accordance with Clause 2.6, as shown in Figure 3.2.2. The residual holes resulting from such embedment shall be filled by timber plugs glued into place.

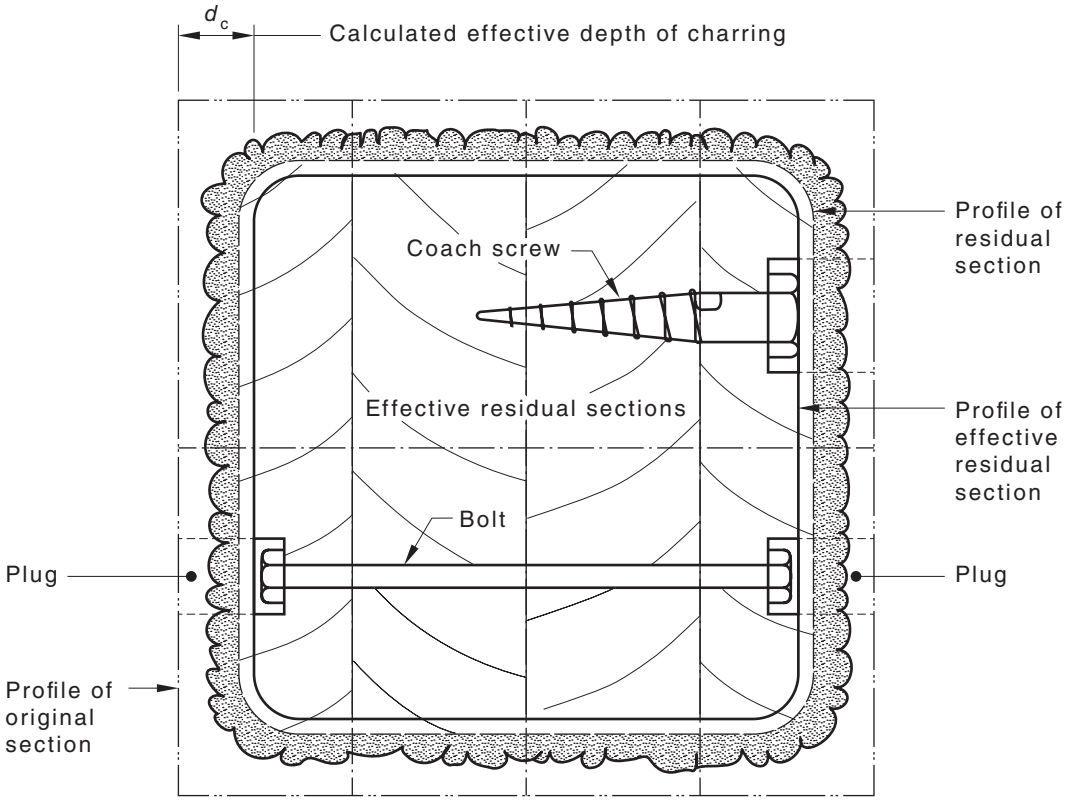

Figure 3.2.2 — A method of protecting metal connectors

3.2.3 Fire-resistant protective insulation covering

An alternative method of obtaining fire resistance for structural adequacy of joints, including those fabricated with metal connectors, shall be to protect the connectors with fire-resistant protective insulation covering. The protective insulation covering shall be thick enough to prevent the temperature under the insulation exceeding 120 °C before the end of the fire resistance period for protected metal

© Standards Australia Limited/Standards New Zealand 2019

plate connectors, or 300 °C for dowel type fasteners. Protective insulation coverings shall be applied and fixed in accordance with testing and performance demonstrated in accordance with a standard fire test.

NOTE 1 Heat can be transferred very rapidly from the fire to a timber-bearing surface via exposed metal plate connector systems, especially those with a large metal surface exposed to the fire.

NOTE 2 Fire-resistant protective insulation covering should be fixed to joints in such a manner that it does not become separated under the combined effects of joint deformation and fire exposure.

3.2.4 Fire resistance testing

The fire resistance for structural adequacy of a connector system shall be demonstrated in accordance with a standard fire test.

© Standards Australia Limited/Standards New Zealand 2019

Appendix A
(normative)

Determination of notional charring rate by test

A.1 Scope

This procedure is applicable to timber elements made from the materials described in Clause 1.4 that are free from gaps, splits and voids and are 75 mm thick or thicker.

A.2 Procedure

Tests shall be carried out in accordance with a standard fire test. The panel elements shall only be exposed to fire on one side.

Test results for elements tested in a vertical orientation shall only apply to vertical elements. Test results for horizontal elements that are exposed to fire from below can apply to both horizontal and vertical elements

A.3 Specimen

The specimen shall be representative of the timber element and at least 75 mm thick or the actual thickness of the element. The outer face of the specimen shall have the timber grain running parallel to the exposed surface. Wall and floor panel elements shall be not less than 1 000 mm × 1 000 mm.

Specimen thermocouples shall be as specified in Section 2 of AS 1530.4. The thermocouples shall be placed within the specimen so that a temperature gradient through the timber element can be obtained at a spacing of 10 mm to 20 mm in depth apart. The temperature measurement locations shall be a minimum of 300 mm from the wall of the furnace and from any edge of the specimen or hole contained within the specimen, unless otherwise stated. The temperatures shall be measured in accordance with Section 2 and Paragraph C1 of AS 1530.4.

A.4 Results

Char depth shall be determined by one of the following procedures:

(a) *At the end of the test* — Measure the residual timber element after fire exposure minus the original depth.

(b) *At any time up to the end of the test* — Interpolate the depth of the 300 °C isotherm based on temperature measurements 10 mm to 20 mm apart within the element.

NOTE The char depth is defined as the depth of the 300 °C isotherm.

The charring rate of the timber element shall be determined by the depth of char depth in millimetres divided by the exposure time taken to reach the depth of char. The char rate from a test shall only be applied to fire durations up to the duration of the test.

A.5 Test report

The test report shall be in accordance with Clause 2.16.2 of AS 1530.4 as appropriate for an unloaded barrier element.

© Standards Australia Limited/Standards New Zealand 2019

Appendix B
(informative)

Advanced calculation methods

B.1 General

Advanced calculation methods such as the finite element method of analysis may be used to assess the fire resistance of timber structures for structural adequacy and insulation. This may include but not be limited to —

(a) the determination of the temperature distribution within structural elements; and

(b) the determination of the structural response of elements or a structure subjected to static loading, refer to AS/NZS 1170.0.

Advanced calculation methods for determination of structural adequacy and insulation should provide a realistic analysis of structures exposed to the standard fire test. The methods should be based on fundamental physical behaviour in such a way as to lead to a reliable approximation of the expected behaviour of the relevant structural component under fire conditions.

The contribution of all exposed structural timber elements within a fire compartment should be considered in the overall determination of the design fire.

B.2 Standard fire exposure

For guidance on thermal and mechanical properties of timber at elevated temperatures, refer to Annex B of Eurocode 5.

NOTE For further information on finite element modelling of fire exposed timber, refer to N. Werther et al., "Parametric Study of Modelling Structural Timber in Fire with Different Software Packages, Proceedings", see Bibliography.

B.3 Non-standard fire exposure/design fires

Advanced calculation methods may be based on the standard test fire or on a more realistic (parametric) fire exposure. Any calculation models using non-standard fire exposure should be validated against experimental test results. Where appropriate, consideration should be given to the definition of —

(a) the severity of the design fire (including any applicable decay phase), including provision for full burnout of the fire compartment;

(b) the thermal and mechanical material properties of all structural elements, including their response to elevated temperatures; and

(c) the compartment geometry and conditions, including but not limited to the available ventilation area, linings, and floorplate shape.

Sensitivity studies should be conducted on all of the above inputs (as applicable) to assess the overall sensitivity of the output.

NOTE Annex A of Eurocode 5 provides methods of calculating the charring rate of timber subjected to a range of different "parametric fires". However, this design method is not recommended for use because it has not been verified sufficiently to become an accepted design method.

© Standards Australia Limited/Standards New Zealand 2019

Bibliography

AS/NZS 1530.3, *Methods for fire tests on building materials, components and structures, Part 3: Simultaneous determination of ignitability, flame propagation, heat release and smoke release*

AS/NZS 3837, *Method of test for heat and smoke release rates for materials and products using an oxygen consumption calorimeter*

ISO 5660, *Reaction-to-fire tests — Heat release, smoke production and mass loss rate*

ABCB. National Construction Code (NCC)

MINISTRY OF BUSINESS. Innovation and Employment. New Zealand Building Code Handbook, 2014

Eurocode 5: Design of Timber Structures, Part 1-2: General — Structural Fire Design. EN 1995-1-2 (with 2006 corrigendum). European Committee for Standardization, Brussels

SP TECHNICAL RESEARCH INSTITUTE OF SWEDEN. "Fire Safety in Timber Buildings: Technical Guideline for Europe". SP Report 2010:19. Available from: https://ec.europa.eu/jrc/en

BUCHANAN A.H., ABU A.K. *Structural Design for Fire Safety*. John Wiley and Sons, Chichester, UK, Second Edition, 2016 http://dx.doi.org/10.1002/9781118700402

SMITH I., & FRANGI A. "Use of Timber in Tall Multi-Storey Buildings", *Structural Engineering Document SED 13, International Association for Bridge and Structural Engineering*. IABSE, 2014

WERTHER N., O'NEILL J.W., SPELLMAN P.M., ABU A.K., MOSS P.J., BUCHANAN A.H. "Parametric Study of Modelling Structural Timber in Fire with Different Software Packages, Proceedings", 7th International Conference on Structures in Fire, Zurich, Switzerland, 2012

© Standards Australia Limited/Standards New Zealand 2019

Standards Australia
Standards Australia is an independent company, limited by guarantee, which prepares and publishes most of the voluntary technical and commercial standards used in Australia. These standards are developed through an open process of consultation and consensus, in which all interested parties are invited to participate. Through a Memorandum of Understanding with the Commonwealth government, Standards Australia is recognized as Australia's peak national standards body.

Standards New Zealand
The first national Standards organization was created in New Zealand in 1932. The New Zealand Standards Executive is established under the Standards and Accreditation Act 2015 and is the national body responsible for the production of Standards.

Australian/New Zealand Standards
Under a Memorandum of Understanding between Standards Australia and Standards New Zealand, Australian/New Zealand Standards are prepared by committees of experts from industry, governments, consumers and other sectors. The requirements or recommendations contained in published Standards are a consensus of the views of representative interests and also take account of comments received from other sources. They reflect the latest scientific and industry experience. Australian/New Zealand Standards are kept under continuous review after publication and are updated regularly to take account of changing technology.

International Involvement
Standards Australia and Standards New Zealand are responsible for ensuring that the Australian and New Zealand viewpoints are considered in the formulation of international Standards and that the latest international experience is incorporated in national and Joint Standards. This role is vital in assisting local industry to compete in international markets. Both organizations are the national members of ISO (the International Organization for Standardization) and IEC (the International Electrotechnical Commission).

Visit our websites
www.standards.org.au www.standards.govt.nz

GPO Box 476 Sydney NSW 2001
Phone (02) 9237 6000
Email mail@standards.org.au
www.standards.org.au

PO Box 1473 Wellington 6140
Freephone 0800 782 632
Phone (04) 498 5990
Email enquiries@standards.govt.nz
www.standards.govt.nz

ISBN 978 1 76072 689 8

This page has been left intentionally blank.